ROTATING BEACONS

MBR300R

Up to **23** NM

MBR300R

State-of-the-art LED Technology

The MBR300R is a medium and long-range rotating beacon, fitted with state-of-the-art LED instead of marine lamps. This provides a low-consumption and low-maintenance beacon for more than 100,000 hours. It is ideally designed for isolated solar installations, able to reach up to 23 nautical miles.

Minimum maintenance

Its compact design includes a step-by-step rotating motor and an electronic control unit inside the lantern, thus completing a watertight beacon easy to install and with minimum maintenance.

Long service life

High-quality and resistant manufacturing materials, such as glass and marine aluminium, provide a long-service life under the harshest marine conditions.

This beacon strictly meets IALA Recommendations.

FEATURES

- *State-of-the-art LED technology.*
- *Maximum-efficiency luminous system. Up to 23 nm (T=0.74), 38 nm (T=0.85).*
- *Up to 72 W power consumption.*
- *Average operation lifetime over 15 years.*
- *No lampchanger needed.*
- *Compact design.*
- *Maintenance-free, brushless direct-drive motor.*
- *Rotating speed programmable from 0.5 to 10 rpm.*
- *Status and alarms available for remote monitoring, by opto-isolated signals and RS-232 serial port.*
- *Short-circuit, reverse-polarity and transient over-voltage protections.*
- *Easy installation.*
- *Minimum maintenance.*

MBR300R

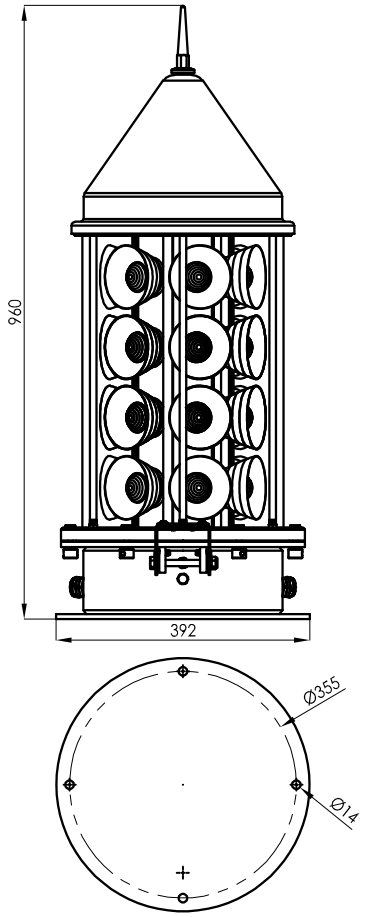

MBR300R with four levels.

Optical system

Light source and Lens:	High-intensity LEDs and Fresnel lens with dioptric and catadioptric prisms.
Luminous range:	Up to 23 nm (T=0.74), 38 nm (T=0.85).
Power consumption:	Up to 72 W.
LED average life:	More than 100,000 hours.

Electronic rotating control

Rotating control:	Based on microprocessor.
Rotating speed:	Programmable by microswitches or PC. From 0.5 to 10 rpm.
Programmed rotating speeds:	64 (accuracy higher than 0.1%).
Day/night threshold:	Adjustable between 10 and 400 lux.
Input voltage:	From 9 to 36 V d.c.
Protections against:	· Short-circuit. · Reverse polarity. · Transient over-voltage.

Rotating motor

Type:	Brushless d.c. direct-drive, step-by-step motor.
Consumption:	100 mA.
Average life:	More than 15 years.

Materials and environment

Lantern:	Marine aluminium, with polyurethane finishing.
Lens cover:	Tempered glass.
Fixings:	4 bolts in a 355 mm diameter.
Watertightness degree:	IP 66.
Humidity resistance:	100%. Pressure-compensation valve to avoid condensation.
Temperature range:	From -30º to 70ºC.

Options

Other colours available.

A.C. power supply.

Remote monitoring modules.

RS-485 MODBUS serial port.

Other specifications available under request.

MBR300L version with LED light source and Fresnel lens as an option.

MBR300X version with xenon lamp and Fresnel lens as an option.

MBR300HI version with halide lamp and Fresnel lens as an option.

MBR300-S sectorised version available.

! *Specifications subject to change without previous notice.*

MBR300R

No. of levels	Stationary Intensity I_o (Cd)	Effective intensity I_e (Cd)								
		Rotating speed (rpm)								
		0.5	1	1.5	2	2.5	3	4	5	6
1	129,654	107,396	92,352	82,388	74,835	68,742	63,705	55,789	49,782	45,016
2	259,308	214,792	184,704	164,776	149,670	137,484	127,410	111,578	99,564	90,032
3	388,962	322,188	277,056	247,164	224,505	206,226	191,115	167,367	149,346	135,048
4	518,616	429,584	369,408	329,552	299,340	274,968	254,820	223,156	199,128	180,064

MSM

Mediterráneo Señales Marítimas, S.L. / +34 96 276 10 22 / msm@mesemar.com / www.mesemar.com