ROTATING BEACONS

# MBR600R

Up to **24** NM

## MBR600R

### State-of-the-art LED Technology

The MBR600R is a long-range rotating beacon, fitted with state-of-the-art LEDs, able to obtain a luminous range of up to 24 nautical miles.

### Great reliability and availability

This equipment includes a redundant rotating system, our MRM 160 gearless and brushless double electronic rotating motor, one working as standby of the main one. This feature lends it a great reliability and availability.

### Long service life

High-quality and resistant manufacturing materials, such as glass and marine aluminium, complete a watertight beacon easy to install and with minimum maintenance. All this provides an estimated lifespan of more than 25 years under the harshest marine conditions.

This beacon strictly meets IALA Recommendations.

## FEATURES

- *State-of-the-art LED technology.*
- *Highest-efficiency luminous system.*
  *Up to 24 nm (T=0.74), 39 nm (T=0.85).*
- *Average operation lifetime over 25 years.*
- *No lampchanger needed.*
- *Redundant rotating system made up of double electronic, gearless and brushless rotating motor.*
- *High reliability and availability.*
- *Rotating speed adjustable in situ from 1 to 6 rpm.*
- *External control unit based on microprocessor, with automatic or manual operation.*
- *Status and alarms available for remote monitoring, by opto-isolated signals and RS-232 serial port.*
- *Short-circuit, reverse-polarity, over-temperature and transient over-voltage protections.*
- *Easy access in case of maintenance or spare replacement.*

# MBR600R

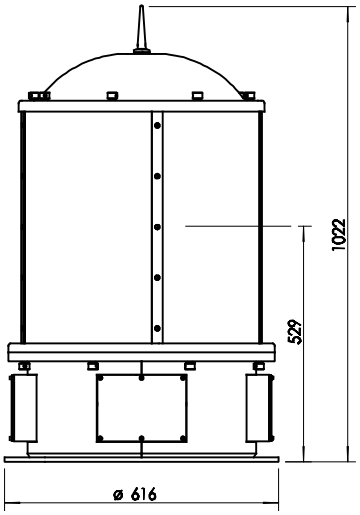


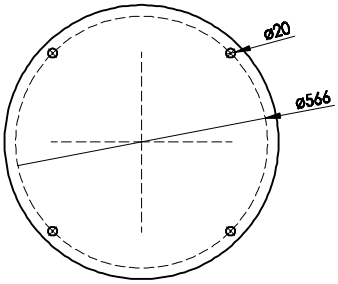


*Specifications subject to change without previous notice.*

## Optical system

| | |
|---|---|
| **Light source and Lens:** | High-intensity LEDs and Fresnel lens with dioptric and catadioptric prisms. |
| **Luminous range:** | Up to 24 nm (T=0.74), 39 nm (T=0.85). |
| **Power consumption:** | Up to 72 W. |
| **LED average life:** | More than 100,000 hours. |

## MRM 160 double rotating motor

| | |
|---|---|
| **Type:** | Double, electronic, gearless and brushless. |
| **Regulation:** | Precise balance with minimum friction. |
| **Rotating speed:** | Adjustable in situ, from 1 to 6 rpm. |
| **Speed setting accuracy:** | 1.3 %. |
| **Motor control:** | Double electronic circuit. |
| **Accessibility:** | 4 nos. lateral accesses. |

## MMC 160 external control unit

| | |
|---|---|
| **Functions:** | · Rotation control (automatic switch-over to standby motor in case of main drive failure).<br>· LED light source control.<br>· Photocell control.<br>· Remote monitoring signals. |
| **Operating modes:** | Automatic (by photocell), Manual (for maintenance) or Remote (for remote monitoring). |
| **Voltage supply:** | 12 or 24 V d.c. |
| **Remote monitoring:** | · Status and alarms ready for remote control and monitoring, by opto-isolated signals.<br>· RS-232 or RS-485 serial port. |

## Materials and environment

| | |
|---|---|
| **Lantern:** | Marine aluminium, with polyurethane finishing. |
| **Lens cover:** | High-resistance glass. |
| **Watertightness degree:** | IP 66. |
| **Humidity resistance:** | 100%. Pressure-compensation valve to avoid condensation. |
| **Temperature range:** | From -30º to 70ºC. |

## Options

Other colours available.

A.C. power supply.

Remote monitoring modules.

Other specifications available under request.

Other lighting systems available.

MBR600L version with LED light source and Fresnel lens as an option.

MBR600X version with xenon lamp and Fresnel lens as an option.

MBR600HI version with halide lamp and Fresnel lens as an option.

MBR600-S sectorised version available.

## MBR600R

| No. of levels | Stationary Intensity $I_o$ (Cd) | Effective intensity $I_e$ (Cd) | | | | | | | | |
|---|---|---|---|---|---|---|---|---|---|---|
| | | Rotating speed (rpm) | | | | | | | | |
| | | 0.5 | 1 | 1.5 | 2 | 2.5 | 3 | 4 | 5 | 6 |
| 1 | 257,544 | 205,181 | 172,081 | 150,805 | 134,928 | 115,380 | 112,537 | 97,132 | 85,655 | 76,720 |
| 2 | 515,088 | 410,362 | 344,162 | 301,610 | 269,856 | 230,760 | 225,074 | 194,264 | 171,310 | 153,440 |
| 3 | 772,632 | 615,543 | 516,243 | 452,415 | 404,784 | 346,140 | 337,611 | 291,396 | 256,965 | 230,160 |

MSM
Mediterráneo Señales Marítimas, S.L. / +34 96 276 10 22 / msm@mesemar.com / www.mesemar.com